# WM-EL204W

## Water-proof Wall Mount Bracket

## Features

- Material: Aluminum
- Wall Mount Bracket
- Neat & Integrated design

## Dimensions (mm)

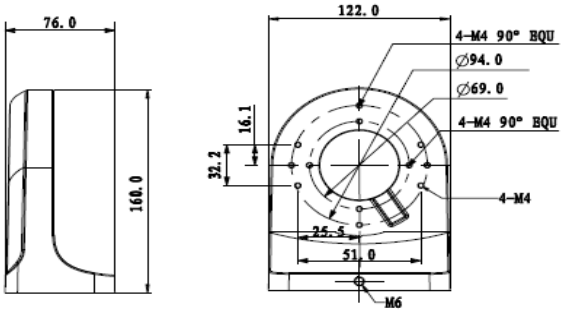


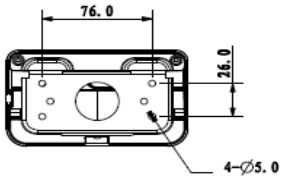


## Specifications

| Model | WM-EL204W |
|---|---|
| **General** | |
| Material | Aluminum |
| Dimension (L x W x H) | 160mm x 122mm x 76mm |
| Operating Temperature | -40°C~60°C |
| Humidity | 0~90% RH |
| Load Bearing | 1.0Kg |
| Weight | 0.49Kg |
| Color | White |
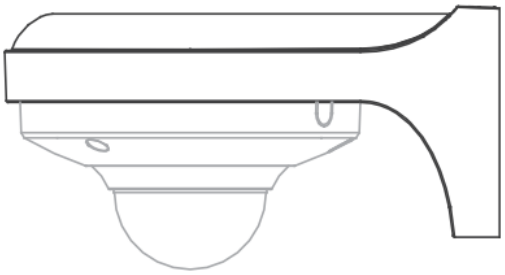
## Application